M17 Circular connector

630V- 14A

Technical characteristics

Specifications	
Specifications	DIN EN 60 664 DIN EN 61 984
Approvals	

Electrical data		Mechanical date	
Number of contacts	7(6+PE)	Housing material	copper alloy,zinc alloy
Rated current	14A	Housing surface	Nickel-plated
mm^2/ AWG	(0.03-1.5 mm^2 / AWG 32-16)	Contact resistance	≤ 5 mΩ
Rated voltage	630 V	Insulating bodies	PBT
Rated impulse voltage	6kV	Contact material	copper alloy
Pollution degree	3	Contact surface	gold plated
Flammability acc. to UL 94	V0 (UL94)	Mechanical working life	>500
Overvoltage categorie	III	Degree of protection	IP67
		Temperature range	-40°C ...+130°C

Crimp terminal

order crimp contacts separately

Contacts	Cable outlet	Designation	Order No.
7(6+PE)	6-9mm	M17-007-CCT/RA-D9.5-SH	165 007 700 2515
	9-12mm	M17-007-CCT/RA-D12-SH	165 007 700 2516
	6-9mm	M17-007R-CCT/RA-D9.5-SH	165 007 700 2517
	9-12mm	M17-007R-CCT/RA-D12-SH	165 007 700 2518
	6-9mm	M17-007/B-CCT/RA-D9.5-SH	165 007 700 2519
	9-12mm	M17-007/B-CCT/RA-D12-SH	165 007 700 2520
	6-9mm	M17-007R/B-CCT/RA-D9.5-SH	165 007 700 2521
	9-12mm	M17-007R/B-CCT/RA-D12-SH	165 007 700 2522

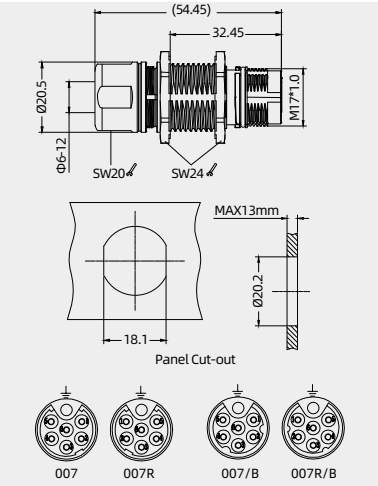

Crimp contacts

Crimp contacts

NO.	Wire gauge(mm^2)	Male	Order No.
①	0.03-0.34	M23-MC9G-0.34	101 031 210 2501
②	0.14-1.0	M23-MC9G-1.0	101 031 210 0801
③	0.5-1.5	M23-MC9G-1.5	101 031 210 0901
NO.	Wire gauge(mm^2)	Female	Order No.
①	0.03-0.34	M23-FC9G-0.34	101 031 220 2501
②	0.14-1.0	M23-FC9G-1.0	101 031 220 0801
③	0.5-1.5	M23-FC9G-1.5	101 031 220 0901

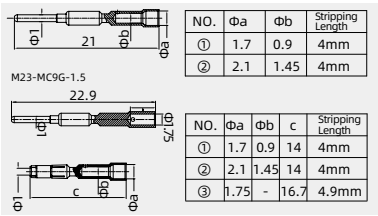

NO.	Φa	Φb	Stripping Length
①	1.7	0.9	4mm
②	2.1	1.45	4mm

NO.	Φa	Φb	c	Stripping Length
①	1.7	0.9	14	4mm
②	2.1	1.45	14	4mm
③	1.75	-	16.7	4.9mm

Tools

Crimping tool

Wire gauge	Designation	Order No.
0.14-4 mm^2	TL28-2	198 001 001 0039

Notes: The tools for crimp terminal may influence the product quality and stability. Please select the tools recognized by our company.